Engineered Product Reference Guide

BV3I-Series Multi-Port Ball Valve

The Right Connection®

Sizes
- 1/4" to 2”

Features and Benefits
- Full port stainless steel ball
- ISO 5211 mounting pad
- Blow-out proof stem

Specifications
- Maximum pressure: **1000 PSI WOG**
- Temperature range: **40°F** to **400°F**
- 100% air tested under water at **80 PSI**
- Female NPT ends

Size	L-Port Part #	T-Port Part #	Weight (lbs)	Break Torque (in-lbs)	ISO 5211
1/4”	BV3IGLF-0251-A	BV3IGTF-0251-A	.70	105	F03/F04
3/8”	BV3IGLF-0381-A	BV3IGTF-0381-A	.72	105	F03/F04
1/2”	BV3IGLF-0501-A	BV3IGTF-0501-A	.72	138	F03/F04
3/4”	BV3IGLF-0751-A	BV3IGTF-0751-A	1.11	184	F04/F05
1”	BV3IGLF-1001-A	BV3IGTF-1001-A	1.71	323	F04/F05
1-1/4”	BV3IGLF-1251-A	BV3IGTF-1251-A	2.77	461	F05/F07
1-1/2”	BV3IGLF-1501-A	BV3IGTF-1501-A	3.82	633	F05/F07
2”	BV3IGLF-2001-A	BV3IGTF-2001-A	6.73	1037	F07/F10

Dimensions

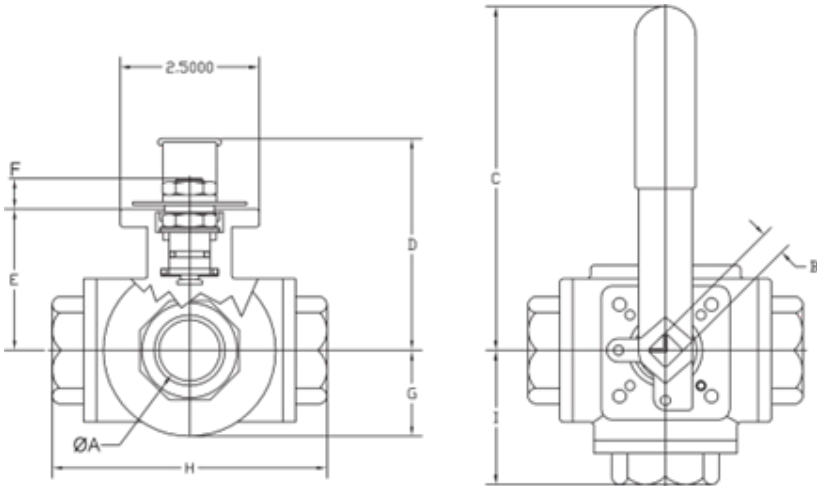

Size	A (in)	B (mm)	C (in)	D (in)	E (in)	F (in)	G (in)	H (in)	I (in)
1/4”	.43	9	5.12	2.44	1.45	.40	.78	2.83	1.41
3/8”	.47	9	5.12	2.44	1.45	.40	.78	2.83	1.41
1/2”	.59	9	5.12	2.51	1.65	.45	.91	3.26	1.63
3/4”	.78	11	6.49	3.22	1.65	.59	1.10	3.89	1.94
1”	.98	11	6.49	3.50	2.18	.55	1.33	4.40	2.20
1-1/4”	1.25	14	8.07	3.85	2.48	.64	1.53	4.92	2.46
1-1/2”	1.50	14	8.07	4.25	2.88	.62	1.88	5.86	2.93
2”	2.0	17	12.79	5.51	3.63	.88	2.36	6.85	3.42

BV3I-Series Ball Valve
Flow Path Codes

The Right Connection®

3-Way | L-Port

3-way 'L'-port Position A	3-way 'L'-port Position B	3-way 'L'-port Position C

Number	Rotation	Flow Path Options
1	90°	A, B
2	180°	A, B, C

3-Way | T-Port

3-way 'T'-port Position A	3-way 'T'-port Position B	3-way 'T'-port Position C	3-way 'T'-port Position D
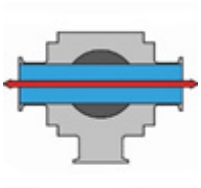	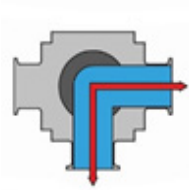		

Number	Rotation	Flow Path Options	Number	Rotation	Flow Path Options
1	90°	A, B	5	180°	A, B, C
2	90°	B, C	6	180°	B, C, D
3	90°	C, D	7	180°	A, C, D
4	90°	A, D	8	180°	A, B, D

Pressure Temperature Chart

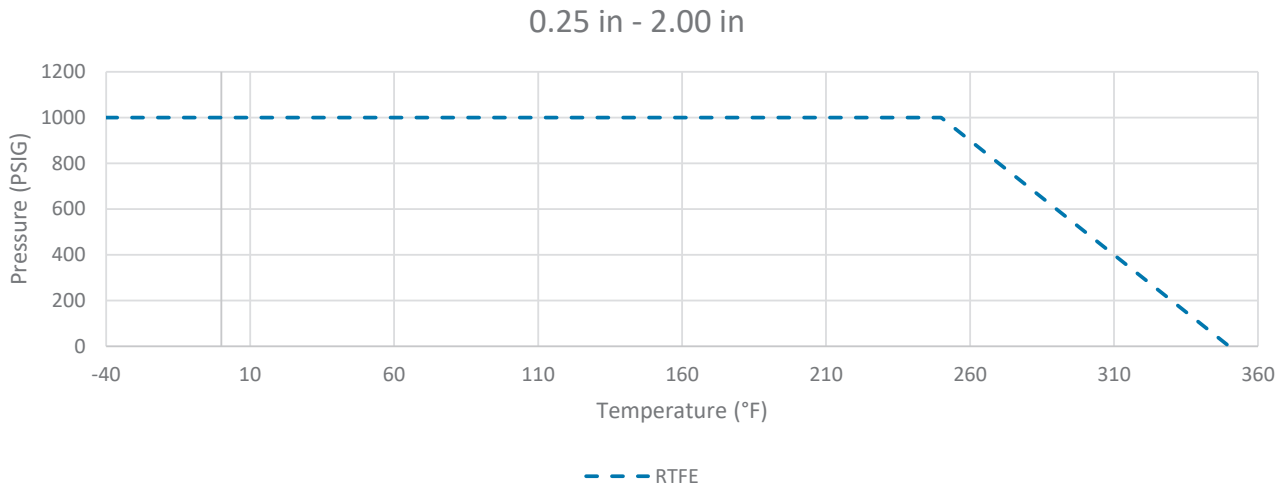

BV3I-Series Ball Valve
Bill of Materials

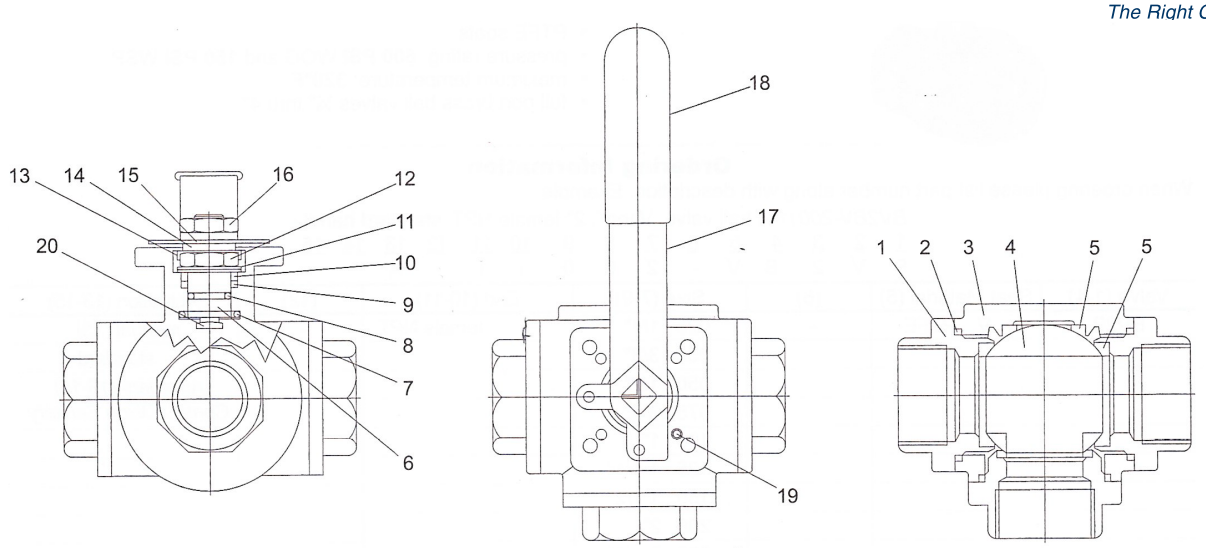

Item	Description	Material	Qty
1	end cap	CF8M	1
2	gasket	PTFE	3
3	body	CF8M	1
4	ball	CF8M	1
5	seat	PTFE	4
6	stem	RTFE	1
7	stem seal	FKM	1
8	O-ring	PTFE	1
9	stem packing	PTFE	1
10	gland	301	1
11	Belleville washer	304	2
12	stem nut	304	1
13	nut stop	304	1
14	space washer	304	1
15	lock saddle	304	1
16	handle nut	304	1
17	handle	304	1
18	handle sleeve	vinyl	1
19	stop pin	304	1
20	insert pin	316	1

Repair Kits

Valve Size	Repair Kit Part #
1/4”	BV-3I-GK0251
3/8”	BV-3I-GK0381
1/2”	BV-3I-GK0501
3/4”	BV-3I-GK0751
1”	BV-3I-GK1001
1-1/4”	BV-3I-GK1251
1-1/2”	BV-3I-GK1501
2”	BV-3I-GK2001

Repair kit contains:
- #2 (3) PTFE gaskets
- #5 (4) PTFE seats
- #6 (1) RTFE stem
- #7 (1) FKM stem seal
- #9 (1) PTFE stem packing

Dixon Sanitary
N25 W23040 Paul Road, Pewaukee, WI 53072
ph: 800.789.1718
dixonvalve.com

© 2024 DVCC • DSEPRG2024_BV3I